REVISION	SYM
UPDATED BARRIER CONSTRUCTION	3

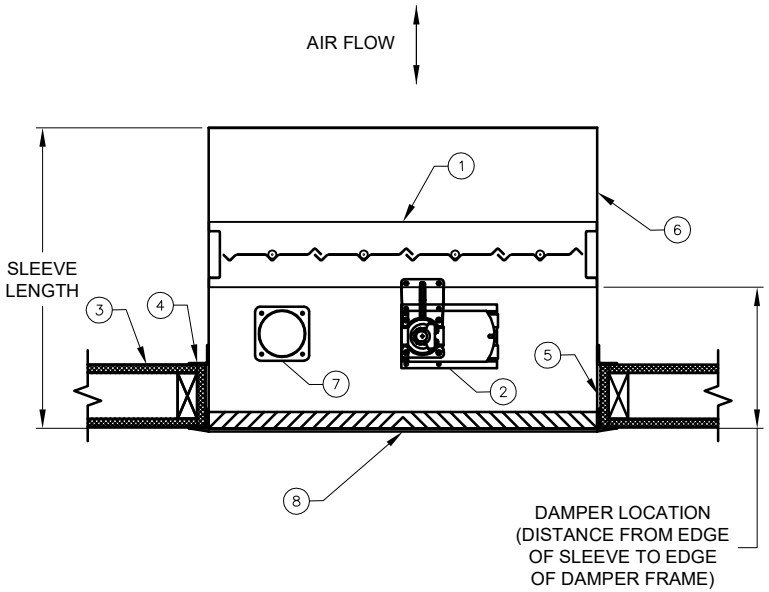

ITEM:
1. UL CLASSIFIED AS BOTH A FIRE DAMPER AND A LEAKAGE RATED SMOKE DAMPER
   1.1 1 HR. LABEL - UL CLASSIFIED CORRIDOR DAMPER
   1.2 1-1/2 HR. LABEL - FOR FIRE SEPARATIONS LESS THAN 3 HOURS.
2. UL QUALIFIED DAMPER/ACTUATOR ASSEMBLY (ELECTRIC)
3. RATED BARRIER
4. RETAINING ANGLES
5. EXPANSION CLEARANCE
6. DAMPER SLEEVE
7. UL LISTED HEAT RESPONSIVE DEVICE (RRL, RRL/OCI, TOR)
8. GRILLE (BY OTHERS)

NOTE:
1. DAMPERS SHALL BE CONSTRUCTED, TESTED, LABELED AND INSTALLED IN ACCORDANCE WITH UL 555, UL 555S, NFPA 80, NFPA 90A, NFPA 92, NFPA 101, NFPA 105, AND DAMPER MANUFACTURER'S INSTALLATION INSTRUCTIONS.
2. RATED BARRIER SHALL MEET THE REQUIREMENTS OF INTERNATIONAL BUILDING CODE (IBC) AND COMPLY WITH LOCAL CODE REQUIREMENTS.
   2.1. DAMPERS SHALL BE RATED FOR VERTICAL OR HORIZONTAL MOUNTING AS REQUIRED AND SHOWN ON PROJECT PLANS.
3. DAMPER OPENING (EXPANSION GAPS) SHALL BE PER DAMPER MANUFACTURER'S UL APPROVED INSTALLATION INSTRUCTIONS.
   3.1. MAXIMUM DAMPER OPENING MAY NOT EXCEED THE DAMPER MANUFACTURER'S MAXIMUM UL LISTED SIZE.
4. SLEEVE GAUGE, TERMINATIONS AND RETAINING ANGLES SHALL BE AS REQUIRED AND COMPLY WITH UL AND SMACNA REQUIREMENTS.
5. HEAT RESPONSIVE DEVICE SHALL BE A SINGLE TEMPERATURE ELECTRIC HEAT SENSOR OR DUAL TEMPERATURE OVERRIDE SENSOR. CHECK PROJECT SPECIFIC REQUIREMENTS AND SPECIFICATIONS FOR TYPE AND TEMPERATURE RATINGS.
7. CFSD-211 MAY BE MOUNTED EITHER HORIZONTALLY OR VERTICALLY. BLADE AXIS MUST REMAIN HORIZONTAL.
8. BASIS OF DESIGN SHALL BE GREENHECK CFSD-211 1-1/2 HOUR RATED 3V BLADE COMBINATION FIRE SMOKE DAMPER.

PAINT	PART NO.	MAT'L	GAUGE	DESCRIPTION

GREENHECK

TITLE: CFSD–211,CONFIG 1, IN CEILING, DETAIL

DRAWN BY: FEUTZ
ECO: IAN86969
DATE: 03/04/2026
ENG. REF.: ----
SUPERSEDES: ----
SCALE: 1/8
CAD DRAWING NO.: 101181081
B

Copyright ® 2025 Greenheck Fan Corporation

Greenheck Fan Coporation reserves the right to make product changes without notice